10000 Series

Max. Door Weight: 220 LBS
Max. Panel Width: 39"
Max. Panel Height: 120"
Door Thickness: 2 1/4"

Description: Offset Top Hung / Bi Folding
Function: Entrance
Detail: Outswing Weathered Sill
Scale: 3" = 1'-0"

HEAD ASSEMBLY 1-1

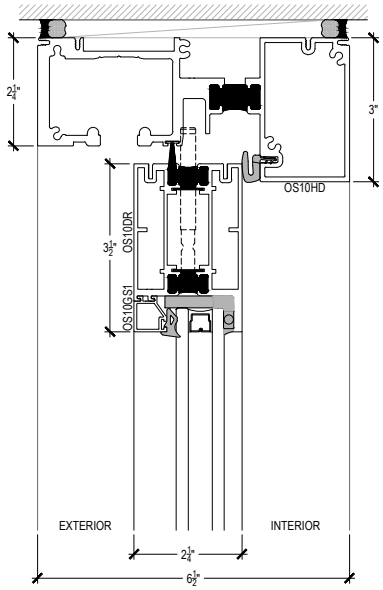

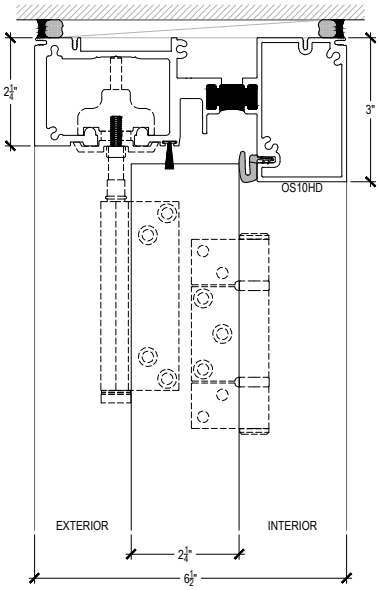

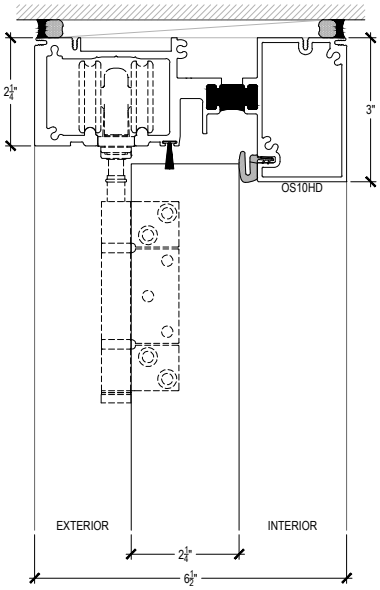

HORIZONTAL ASSEMBLY 2-1

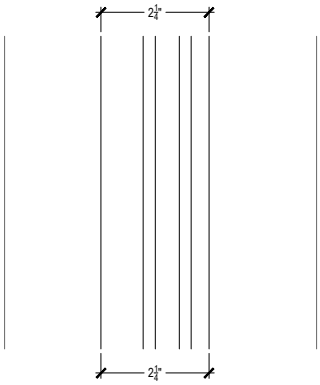

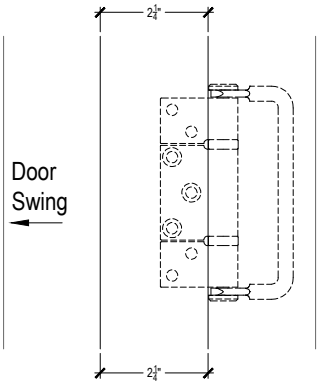

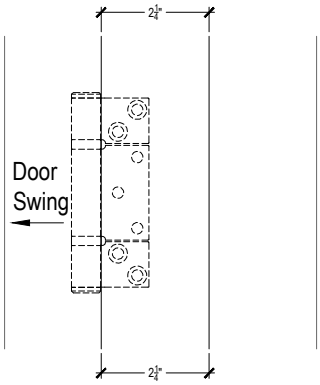

SILL ASSEMBLY 3-1

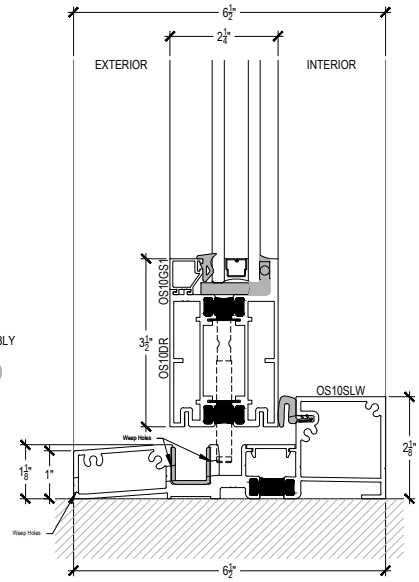

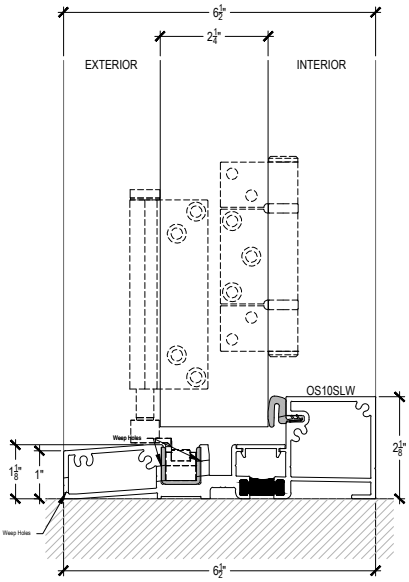

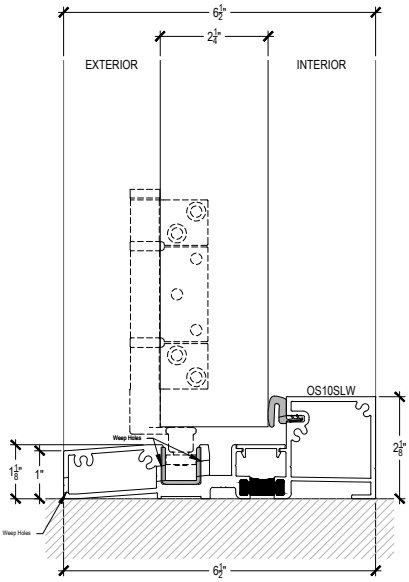

10000 Series

Max. Door Weight: 220 LBS
Max. Panel Width: 39"
Max. Panel Height: 120"
Door Thickness: 2 1/4"

Description: Offset Top Hung / Bi Folding
Function: Entrance
Detail: Outswing ADA Flush Guide Sill
Scale: 3" = 1'-0"

HEAD ASSEMBLY 1-2

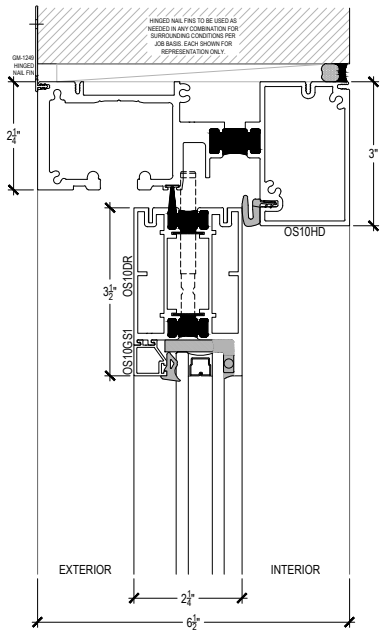

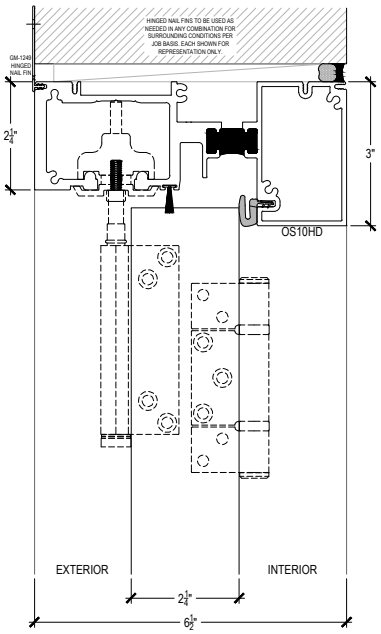

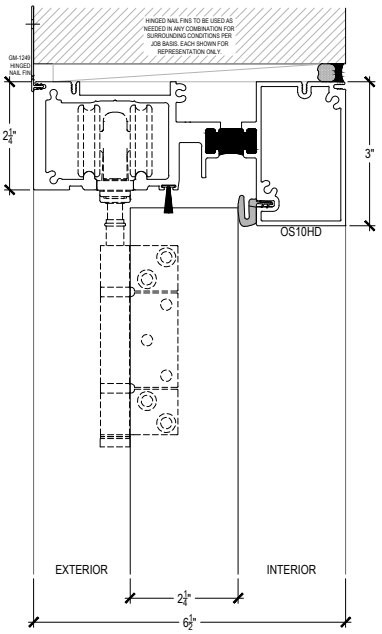

HORIZONTAL ASSEMBLY 2-2

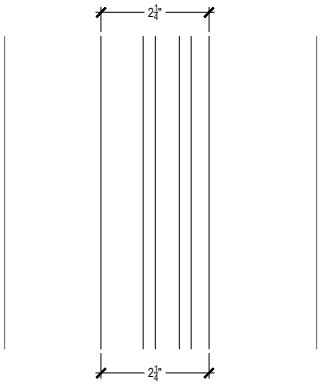

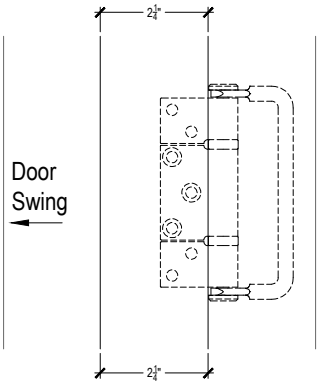

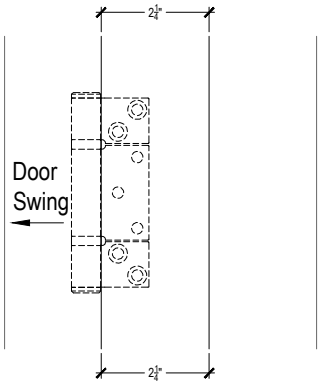

SILL ASSEMBLY 3-2

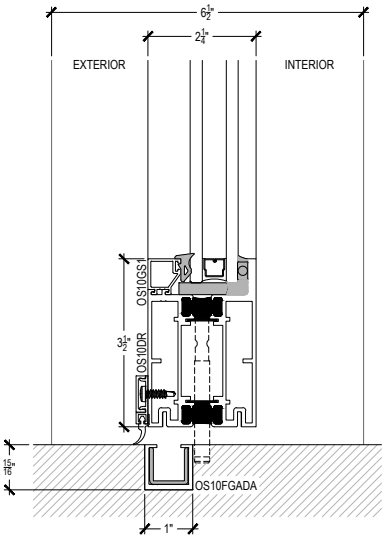

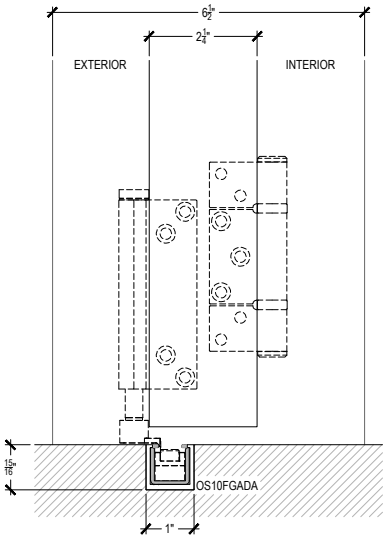

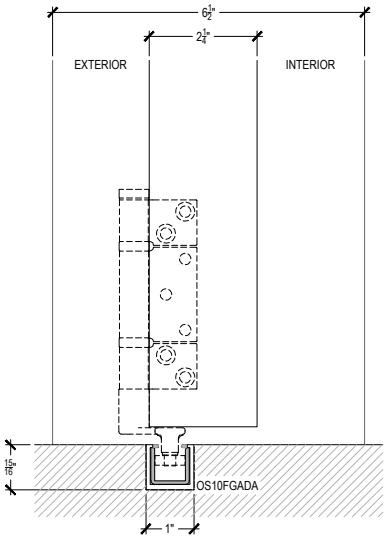

10000 Series

Max. Door Weight: 220 LBS
Max. Panel Width: 39"
Max. Panel Height: 120"
Door Thickness: 2 1/4"

Description: Offset Top Hung / Bi Folding
Function: Entrance
Detail: Outswing ADA Ramp Guide Sill
Scale: 3" = 1'-0"

HEAD ASSEMBLY 1-3

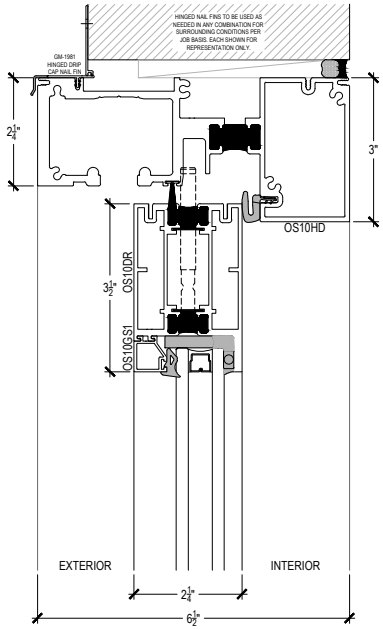

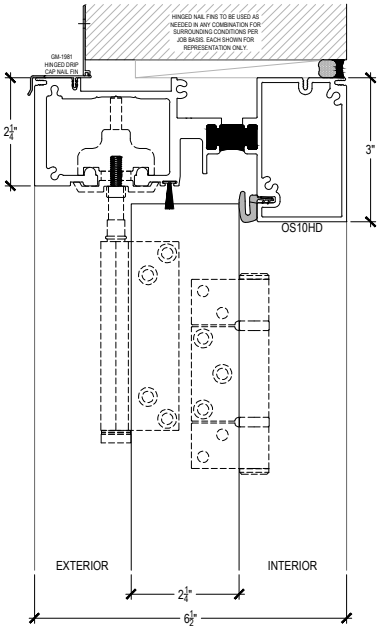

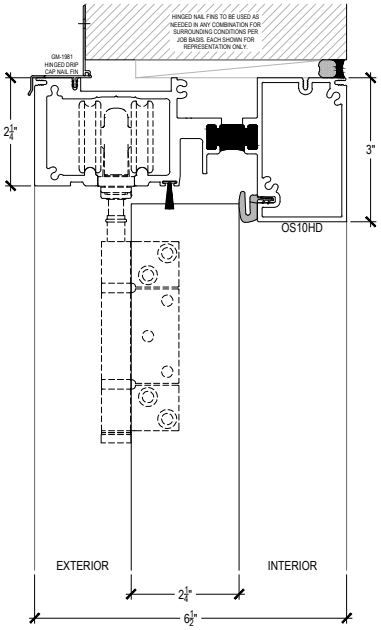

HORIZONTAL ASSEMBLY 2-3

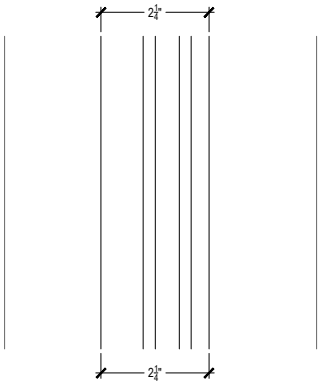

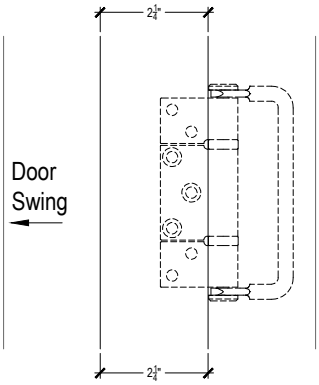

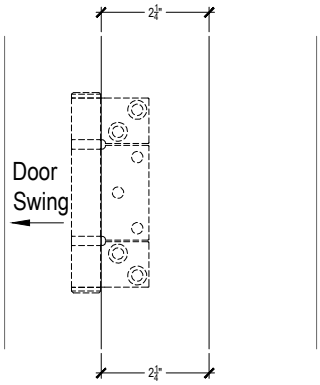

SILL ASSEMBLY 3-3

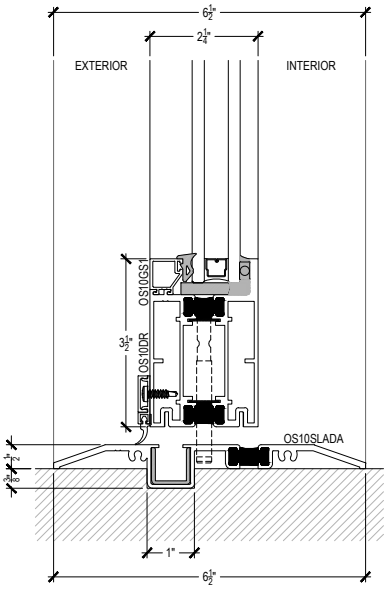

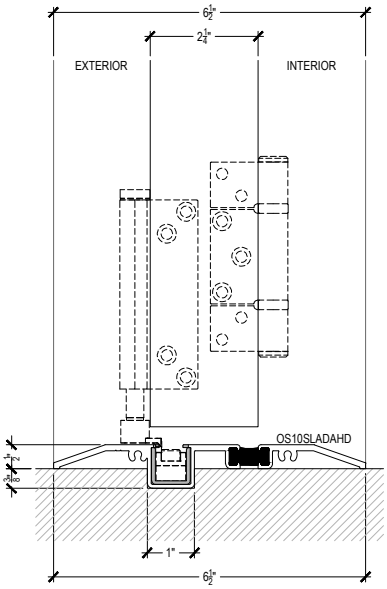

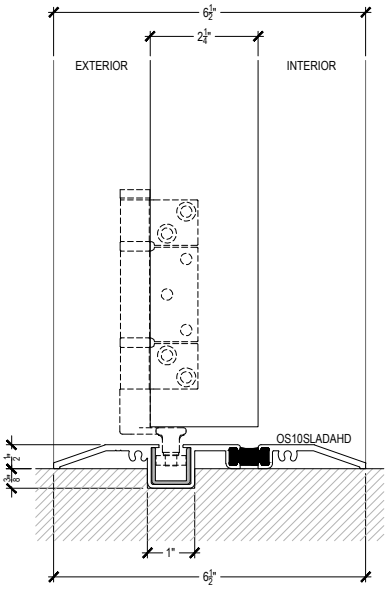

10000 Series

Max. Door Weight: 220 LBS
Max. Panel Width: 39"
Max. Panel Height: 120"
Door Thickness: 2 1/4"

Description: Offset Top Hung / Bi Folding
Function: Entrance
Detail: Outswing Jambs, Meeting Stiles, Swing Door
Scale: 3" = 1'-0"

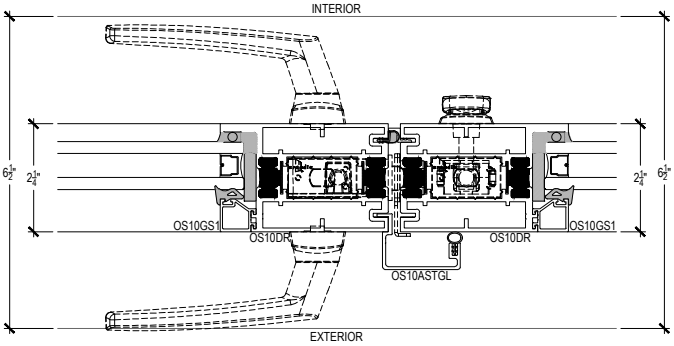

MEETING STILES
@ LOCK ASTRAGAL

4-1

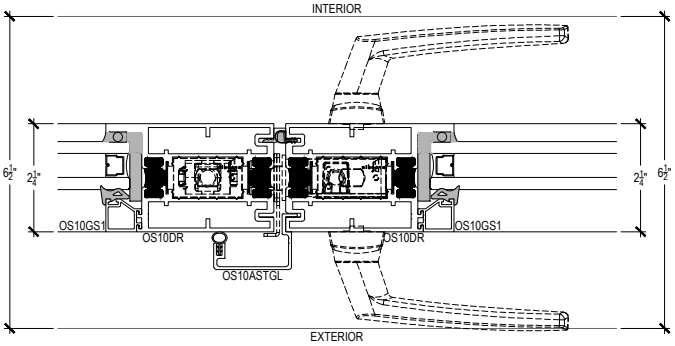

MEETING STILES
@ LOCK ASTRAGAL

4-2

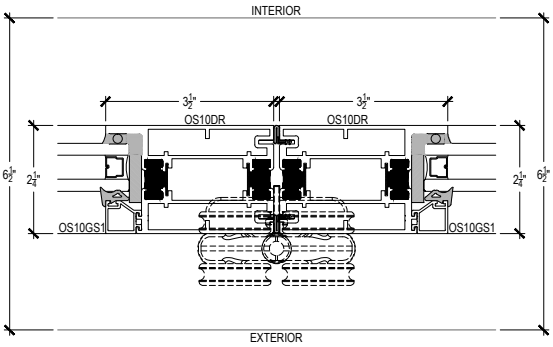

MEETING STILES
@ INTERMEDIATE HANGER

4-3

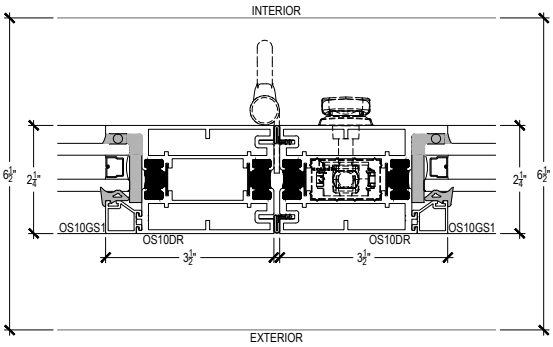

MEETING STILES
@ OFFSET HINGE

4-4

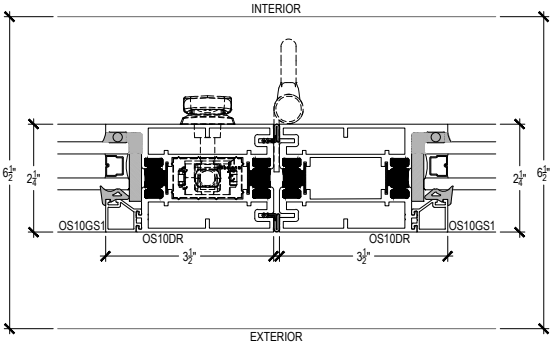

MEETING STILES
@ OFFSET HINGE

4-5

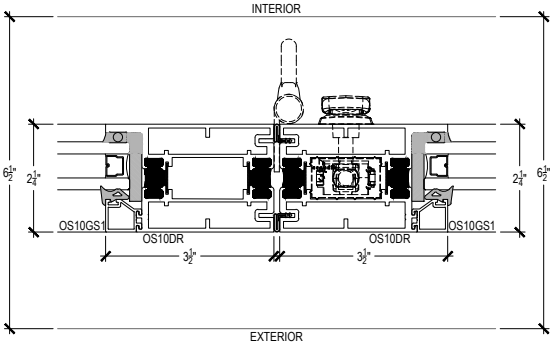

MEETING STILES
@ OFFSET HINGE

4-6

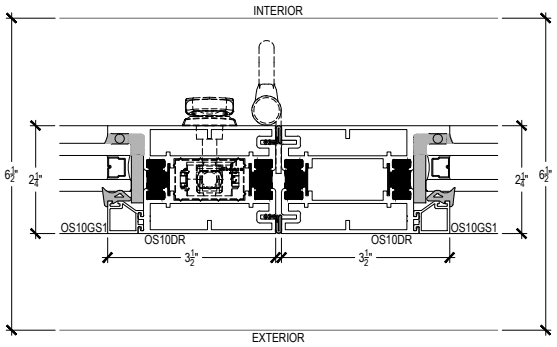

MEETING STILES
@ OFFSET HINGE

4-7

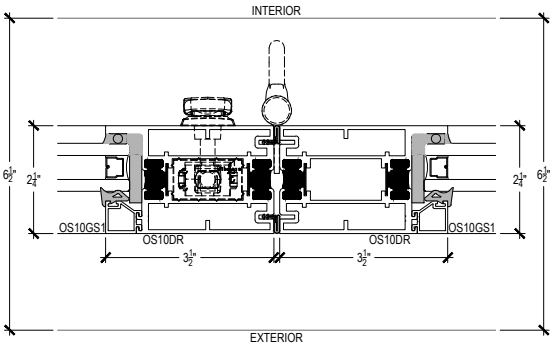

MEETING STILES
@ HINGE

4-8

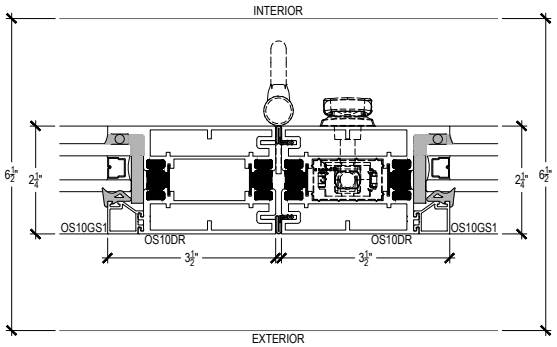

MEETING STILES
@ HINGE

4-9

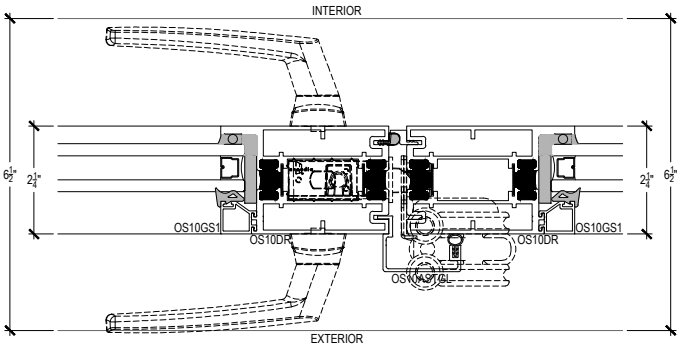

MEETING STILES @ LOCK ASTRAGAL
W/END HANGER ROLLER

4-10

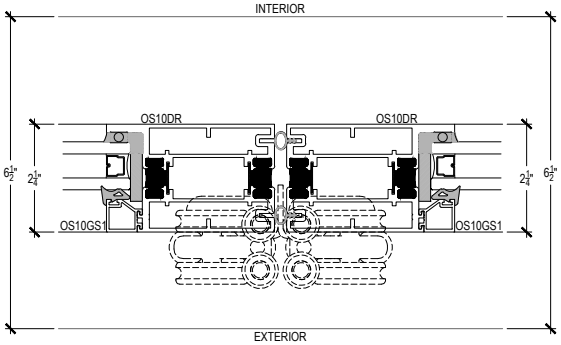

MEETING STILES @
END HANGER ROLLERS

4-11

10000 Series

Max. Door Weight: 220 LBS
Max. Panel Width: 39"
Max. Panel Height: 120"
Door Thickness: 2 1/4"

Description: Offset Top Hung / Bi Folding
Function: Entrance
Detail: Outswing Jambs, Meeting Stiles, Swing Door
Scale: 3" = 1'-0"

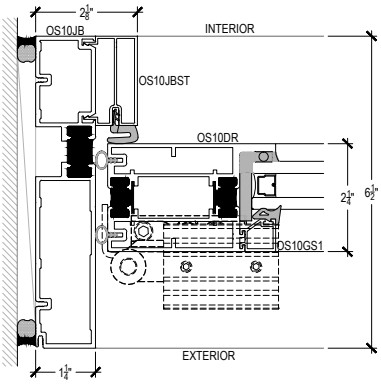

WALL JAMB
@ SWING DOOR

5-1

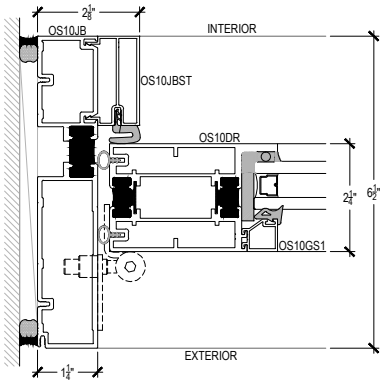

WALL JAMB @ SWING DOOR
OPTIONAL JAMB PIVOT

5-1A

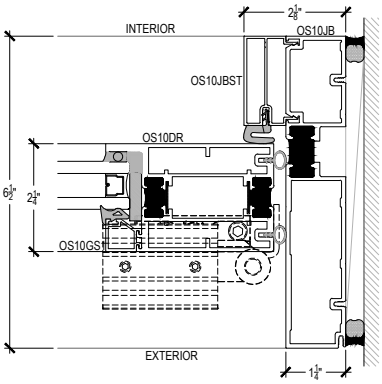

WALL JAMB
@ SWING DOOR

5-2

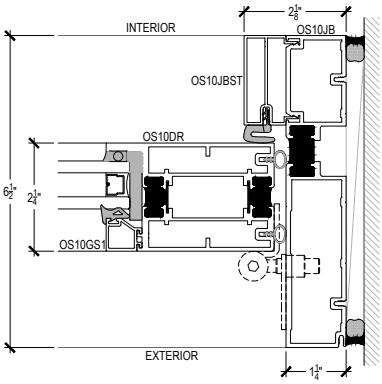

WALL JAMB @ SWING DOOR
OPTIONAL JAMB PIVOT

5-2A

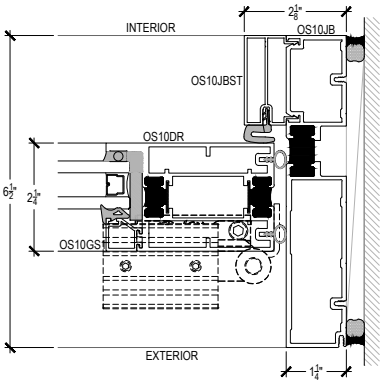

WALL JAMB
@ BI-FOLD DOOR

5-3

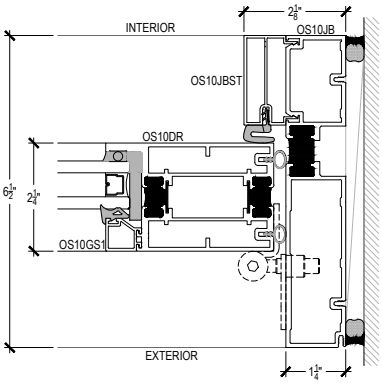

WALL JAMB @ BI-FOLD DOOR
OPTIONAL JAMB PIVOT

5-3A

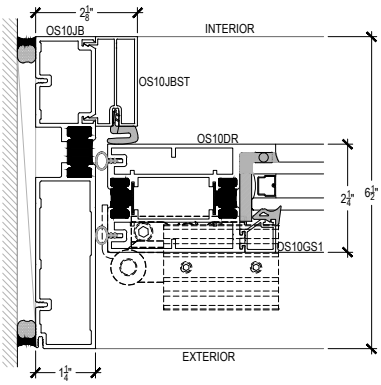

WALL JAMB
@ BI-FOLD DOOR

5-4

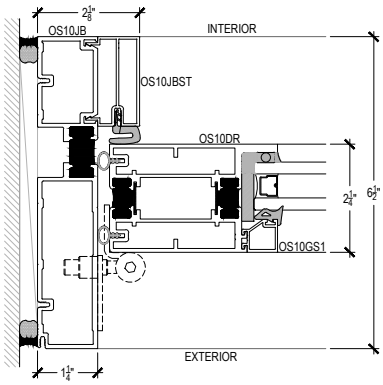

WALL JAMB @ BI-FOLD DOOR
OPTIONAL JAMB PIVOT

5-4A

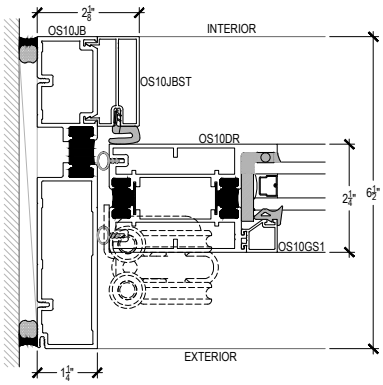

WALL JAMB
@ END HANGER

5-5

10000 Series

Max. Door Weight: 220 LBS
Max. Panel Width: 39"
Max. Panel Height: 120"
Door Thickness: 2 1/4"

Description: Offset Top Hung / Bi Folding
Function: Entrance
Detail: Outswing Jambs, Meeting Stiles, Swing Door
Scale: 3" = 1'-0"

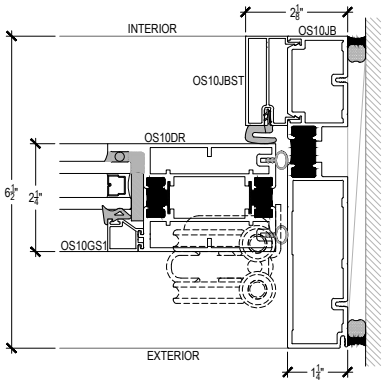

WALL JAMB
@ END HANGER

5-6

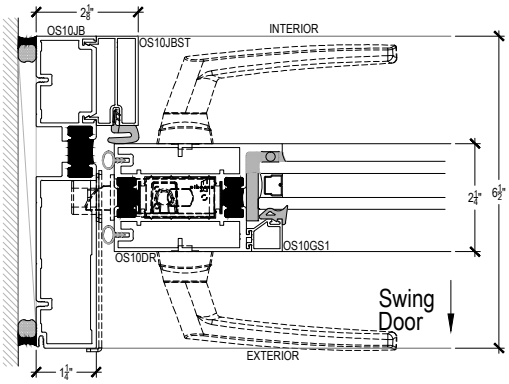

WALL JAMB
@ SWING DOOR

5-7

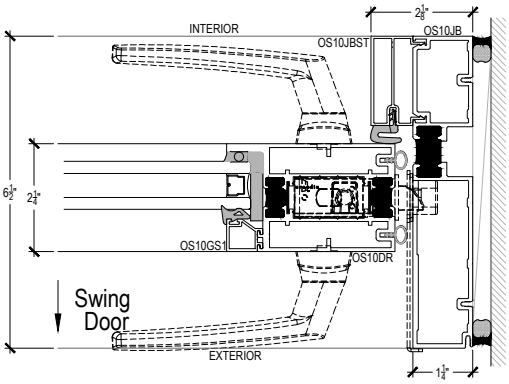

WALL JAMB
@ SWING DOOR

5-8

10000 Series

Max. Door Weight: 220 LBS
Max. Panel Width: 39"
Max. Panel Height: 120"
Door Thickness: 2 1/4"

Description: Offset Top Hung / Bi Folding
Function: Entrance
Detail: Inswing Weathered Sill
Scale: 3" = 1'-0"

HEAD ASSEMBLY 1-4

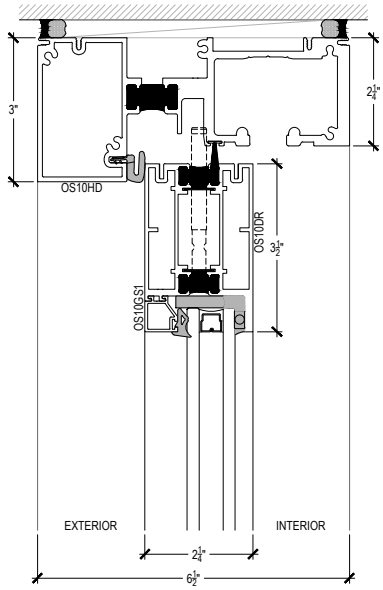

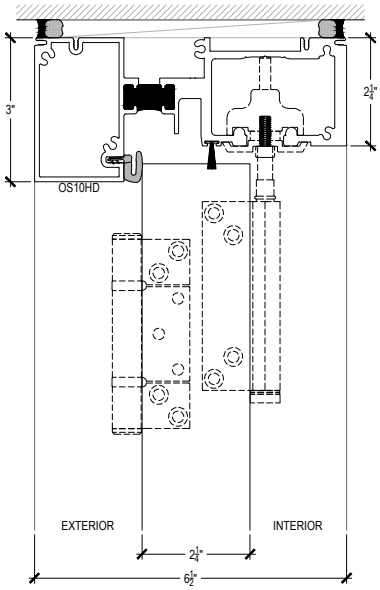

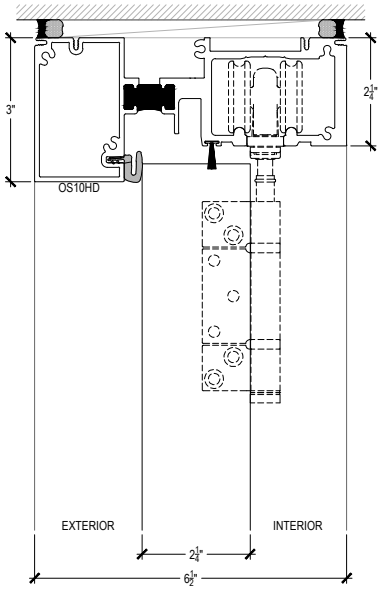

HORIZONTAL ASSEMBLY 2-4

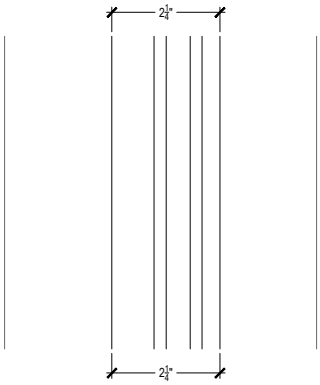

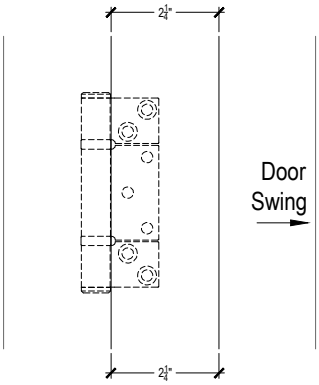

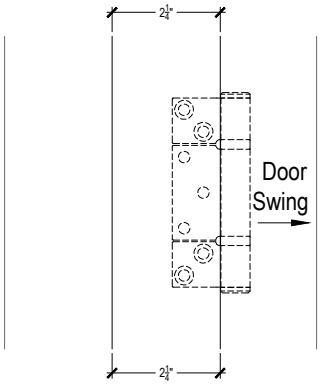

SILL ASSEMBLY 3-5

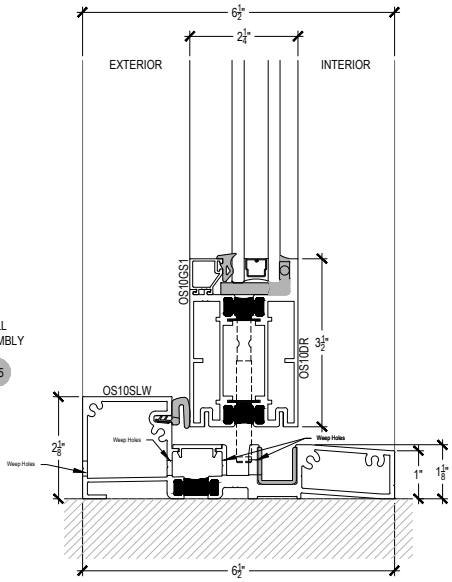

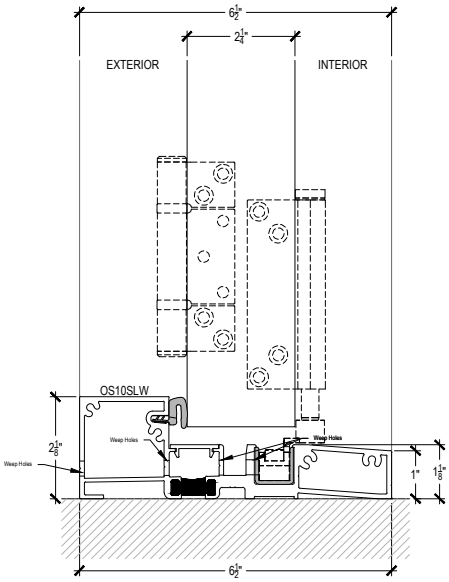

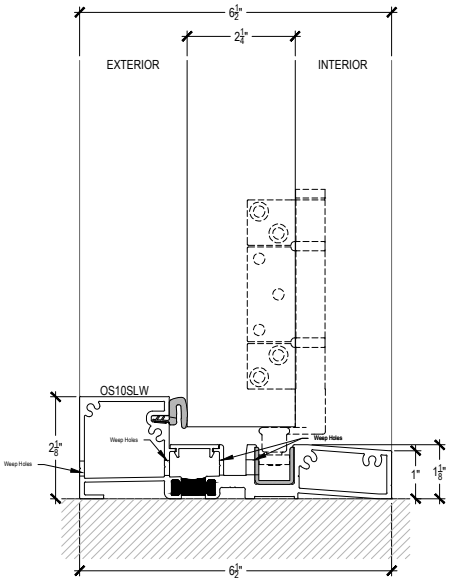

10000 Series

Max. Door Weight: 220 LBS
Max. Panel Width: 39"
Max. Panel Height: 120"
Door Thickness: 2 1/4"

Description: Offset Top Hung / Bi Folding
Function: Entrance
Detail: Inswing ADA Flush Guide Sill
Scale: 3" = 1'-0"

HEAD ASSEMBLY 1-5

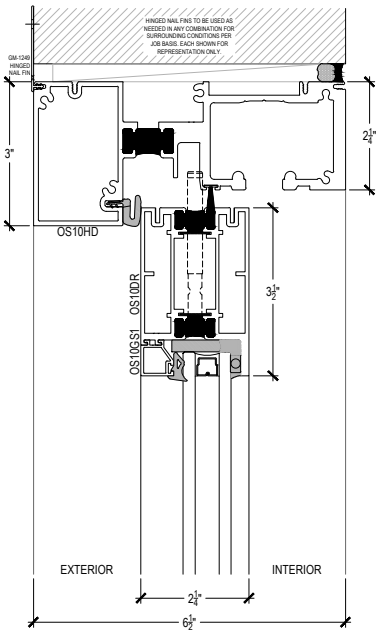

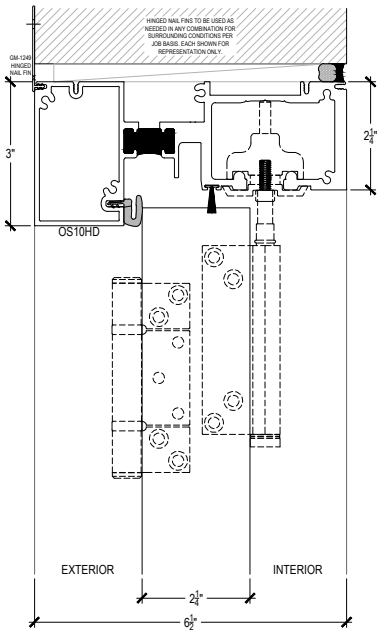

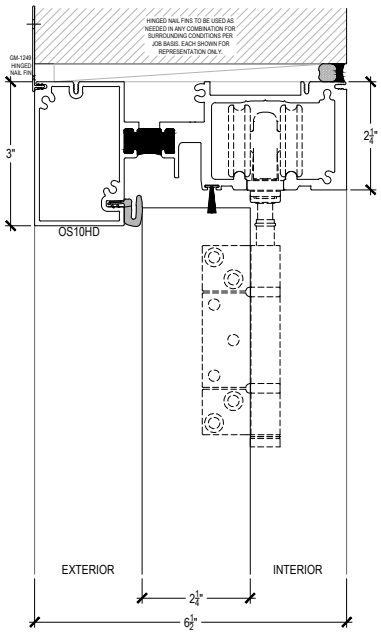

HORIZONTAL ASSEMBLY 2-5

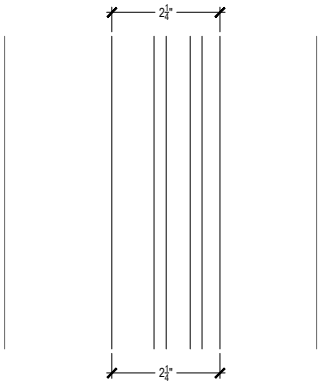

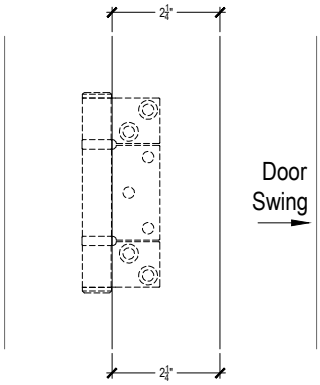

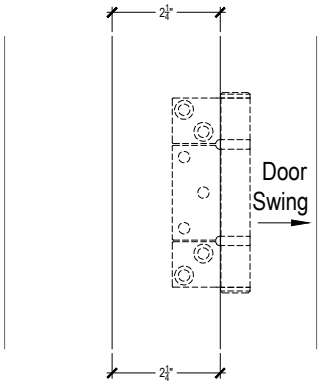

SILL ASSEMBLY 3-5

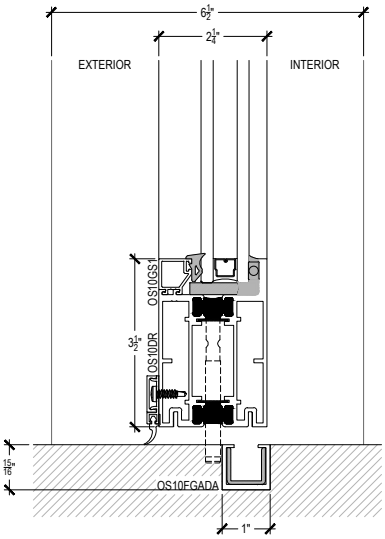

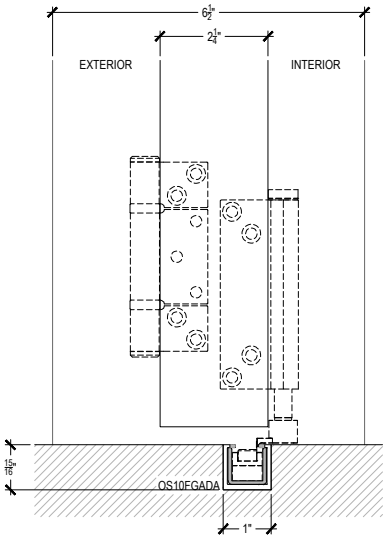

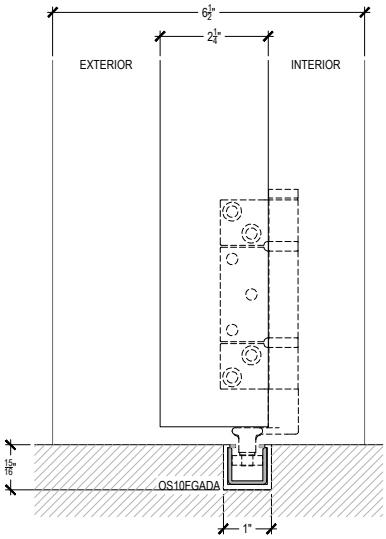

10000 Series

Max. Door Weight: 220 LBS
Max. Panel Width: 39"
Max. Panel Height: 120"
Door Thickness: 2 1/4"

Description: Offset Top Hung / Bi Folding
Function: Entrance
Detail: Inswing ADA Ramp Guide Sill
Scale: 3" = 1'-0"

HEAD ASSEMBLY 1-6

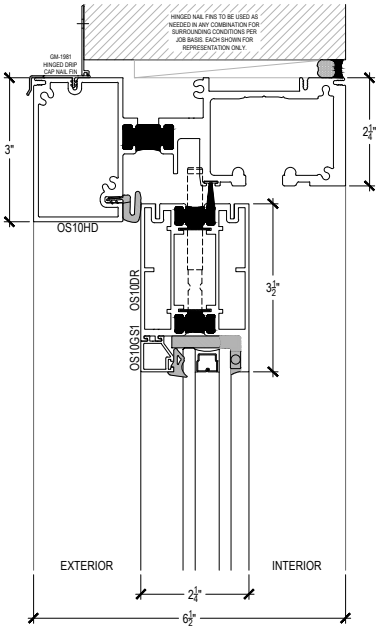

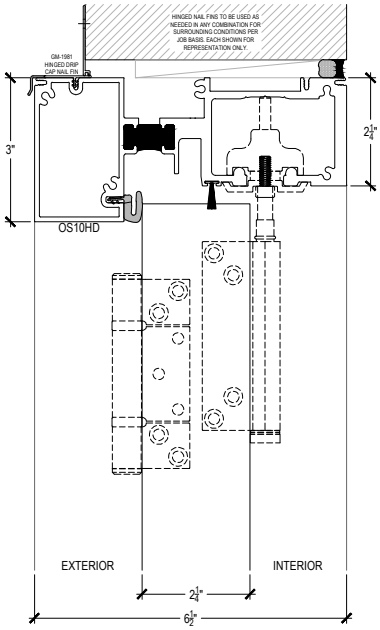

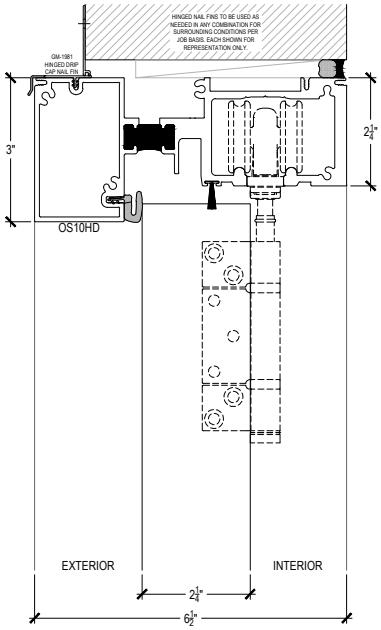

HORIZONTAL ASSEMBLY 2-6

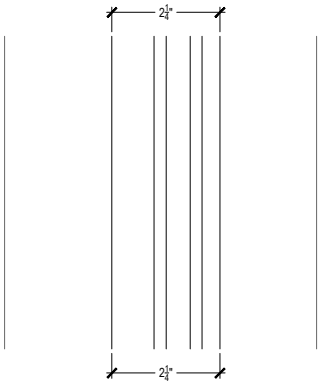

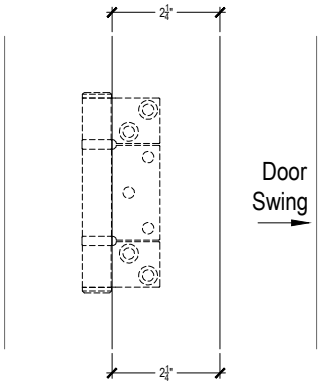

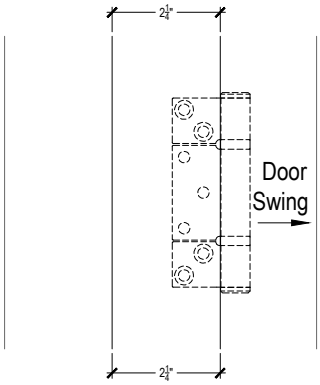

SILL ASSEMBLY 3-6

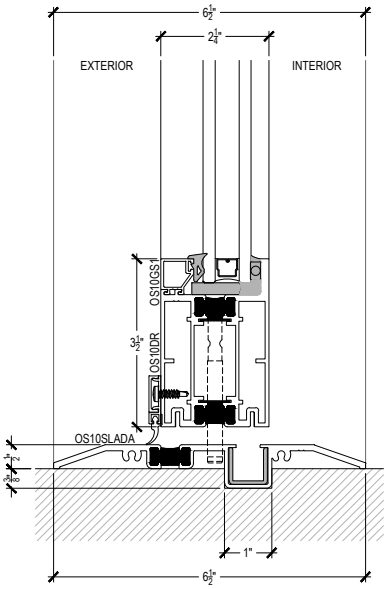

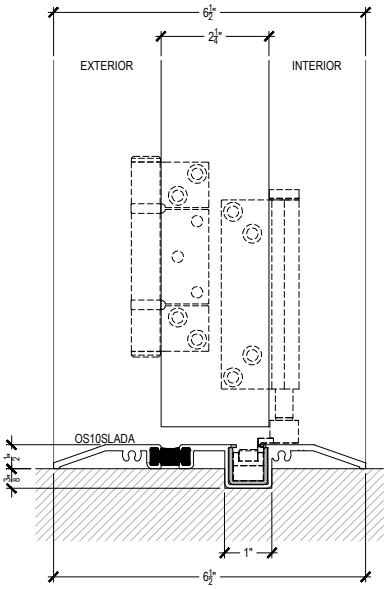

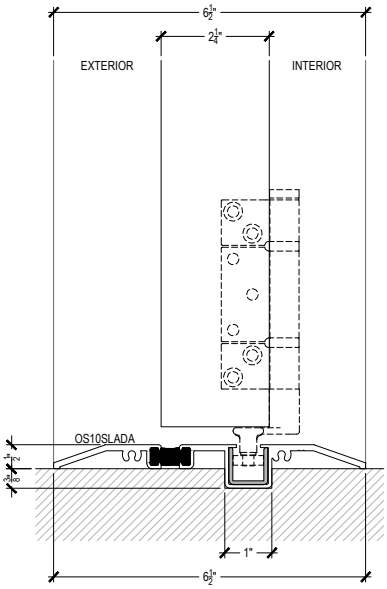

10000 Series

Max. Door Weight: 220 LBS
Max. Panel Width: 39"
Max. Panel Height: 120"
Door Thickness: 2 1/4"

Description: Offset Top Hung / Bi Folding
Function: Entrance
Detail: Inswing Jambs, Meeting Stiles, Swing Door
Scale: 3" = 1'-0"

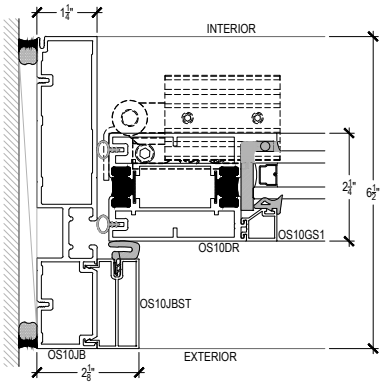

WALL JAMB
@ SWING DOOR

5-?

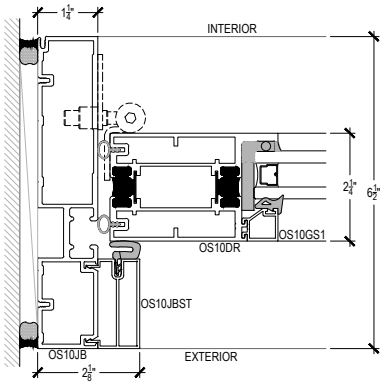

WALL JAMB @ SWING DOOR
OPTIONAL JAMB PIVOT

5-?

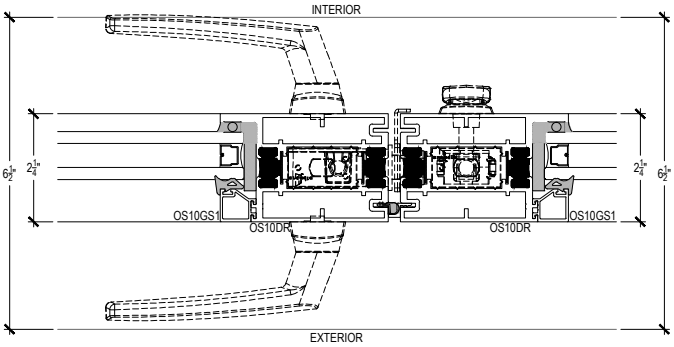

MEETING STILES
@ LOCK ASTRAGAL

4-?

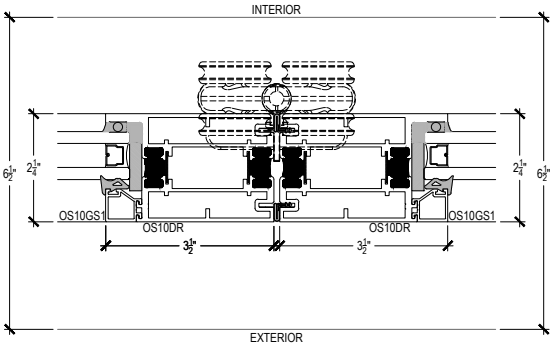

MEETING STILES
@ INTERMEDIATE HANGER

4-?

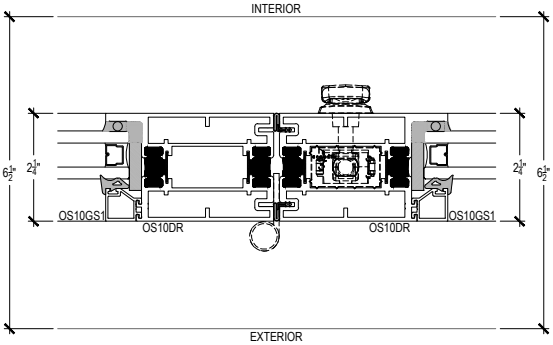

MEETING STILES
@ OFFSET HINGE

4-?

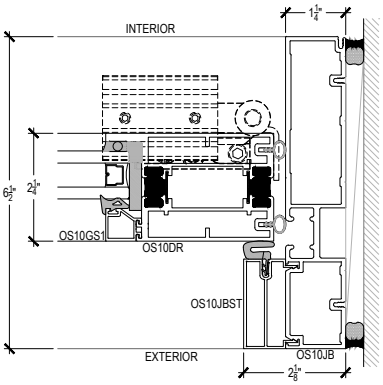

WALL JAMB
@ BI-FOLD SWING DOOR

5-?

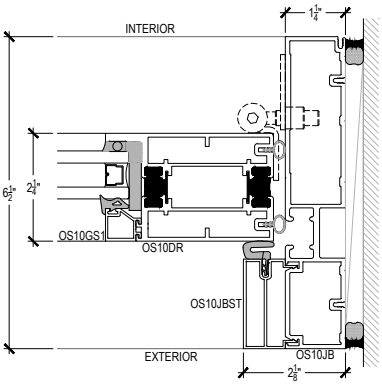

WALL JAMB @ BI-FOLD SWING DOOR
OPTIONAL JAMB PIVOT

5-?