Drywall Adapters Series

Description:Drywall Adapters
Function:Storefront
Detail:Profile
Scale: 1'-0" = 1'-0" (FULL)

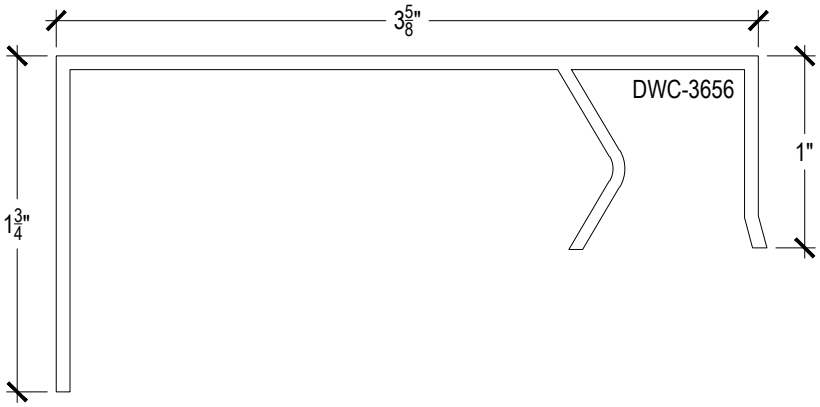

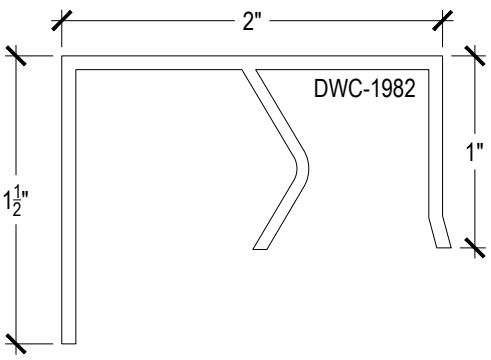

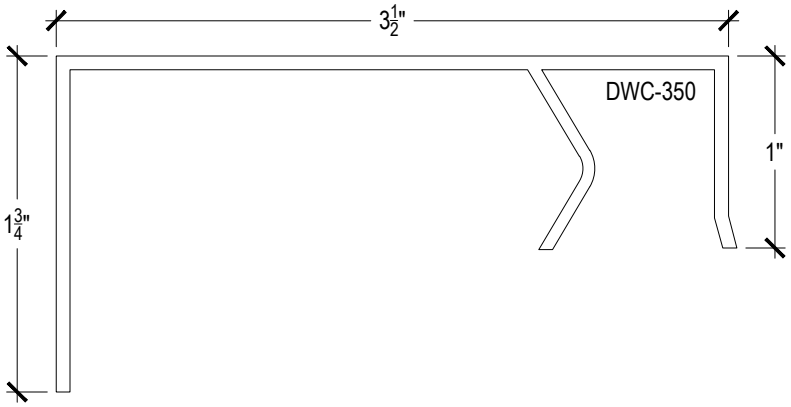

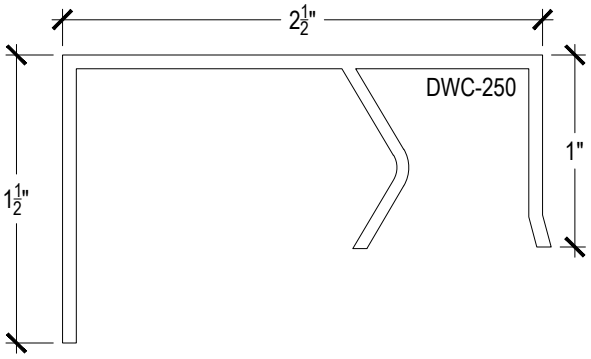

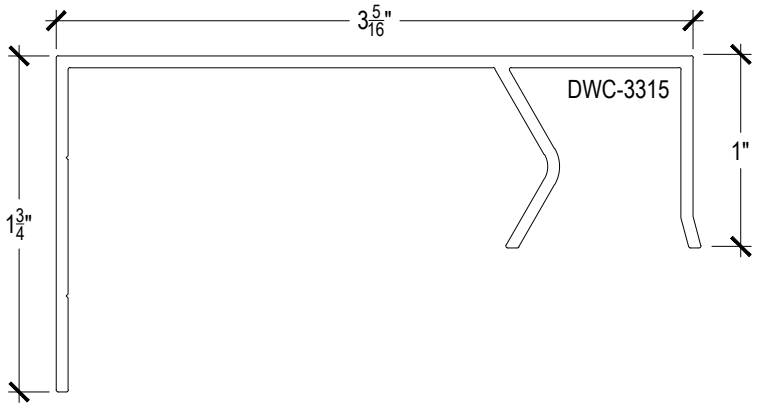

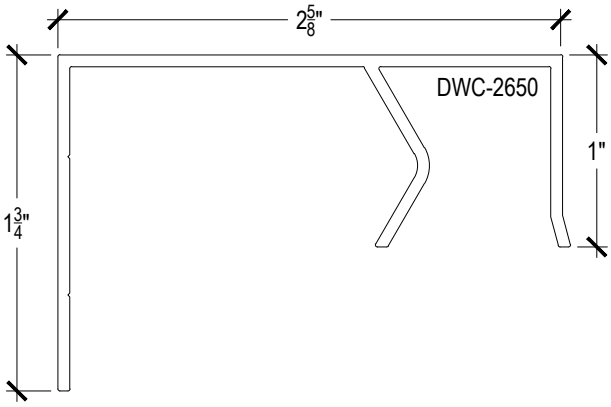

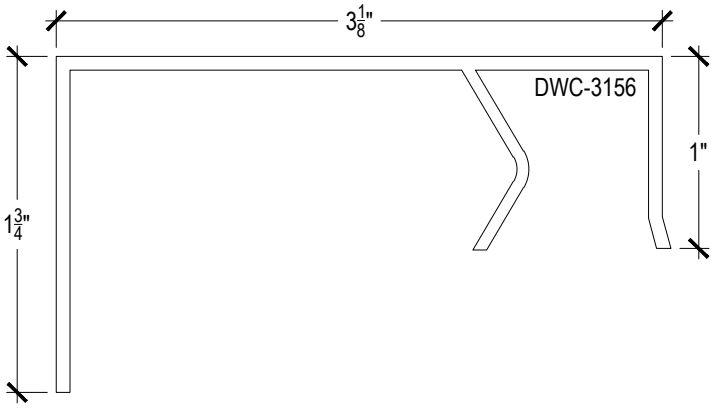

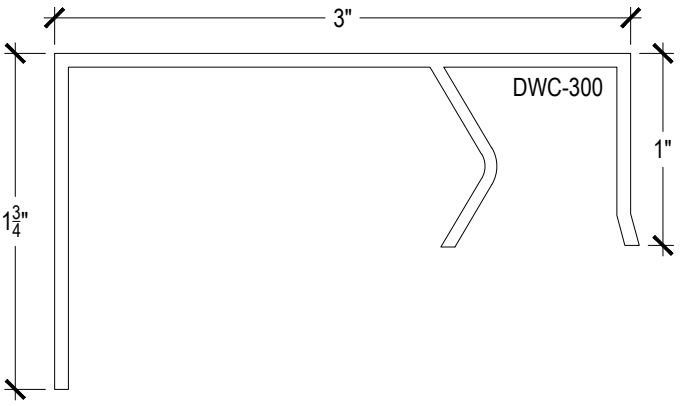

Drywall Adapters Series

Description:Drywall Adapters
Function:Storefront
Detail:Profile
Scale: 1'-0" = 1'-0" (FULL)

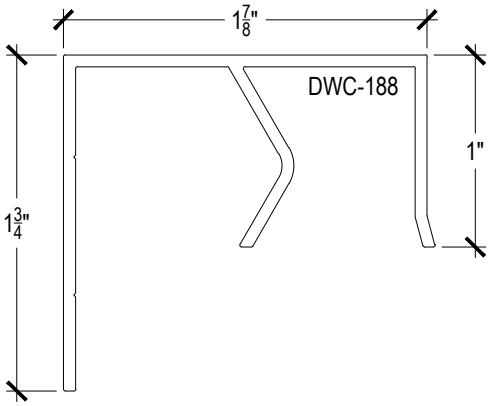

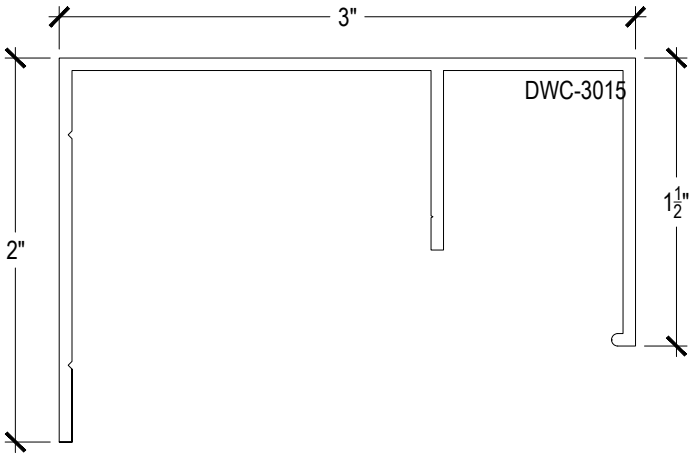

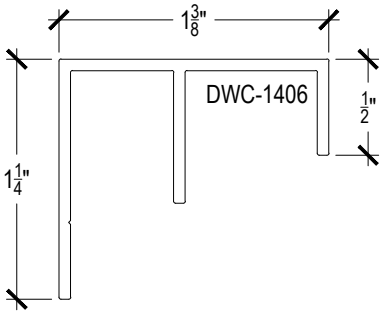

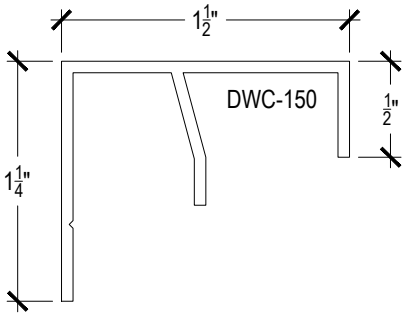

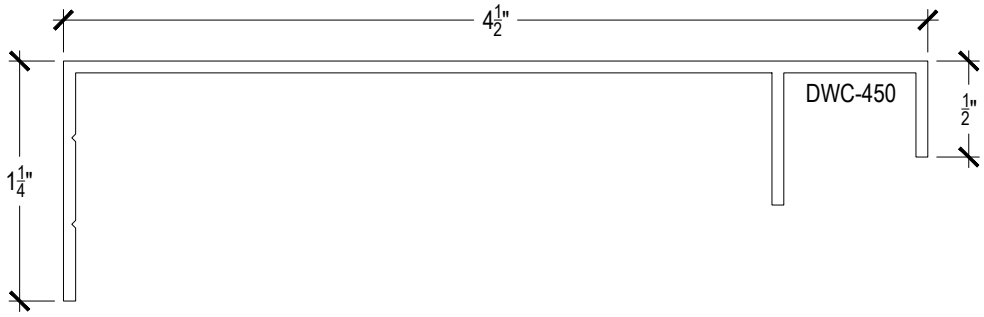

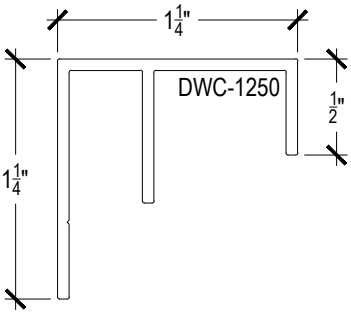

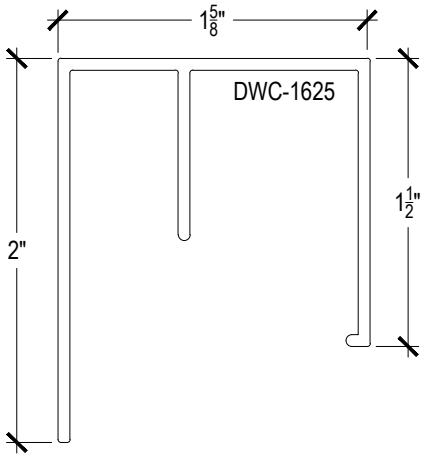

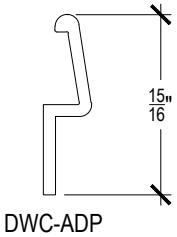

Drywall Adapters Series

Description:Drywall Adapters
Function:Storefront
Detail:Profile
Scale: 1'-0" = 1'-0" (FULL)

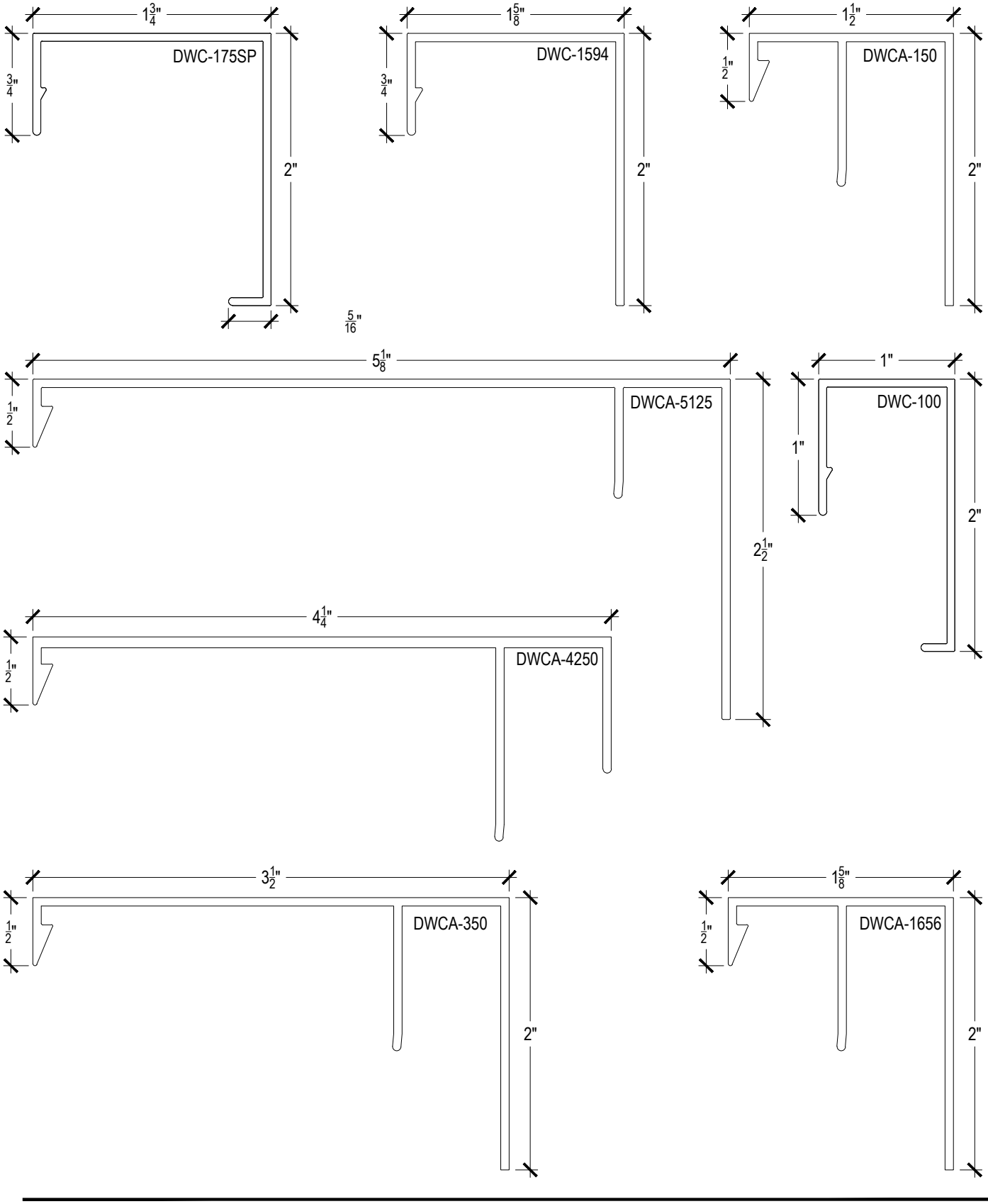

Drywall Adapters Series

Description: Drywall Adapters
Function: Storefront
Detail: Profile
Scale: 1'-0" = 1'-0"

